Cast Iron Directional Guidance Indicators

Neenah Foundry's new cast iron directional guidance indicator offers the most durable guidance indicator on the market. Neenah Foundry now offers a complete line of cast iron products to comply with ADA Guidelines and California Title 24. These products are designed to outlast the surface they are cast into, giving confidence that the area will remain safe for use by everyone.

NEENAH FOUNDRY'S CAST IRON DIRECTIONAL WAYFINDING PLATE IS A LONG-LASTING SOLUTION TO DIRECTIONALLY GUIDE THE SIGHT IMPAIRED

- Made with cast gray iron, these plates are the most durable directional wayfinders on the market
- Iron adheres well to concrete allowing for permanent inclusion for a long-lasting solution
- 12” x 24” plate - Easily set long runs or direct foot traffic in a wider area by placing side-by-side
- Painted plates available in federal yellow, brick red, black or other colors upon request

For additional information please contact us at InfrastructureSolutions@groupnei.com

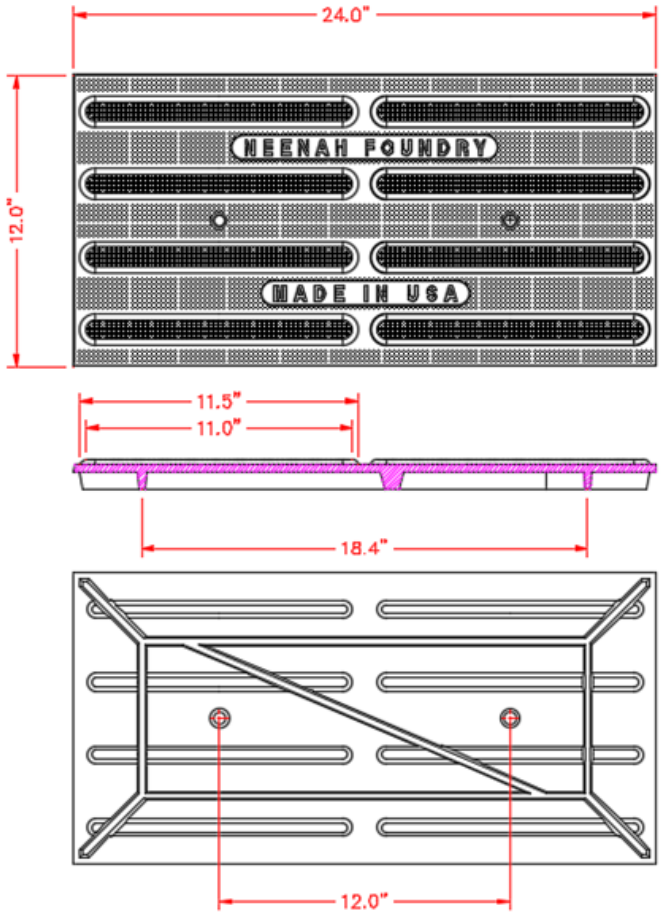

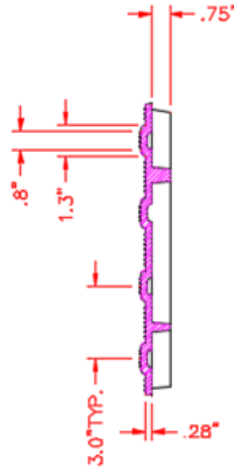

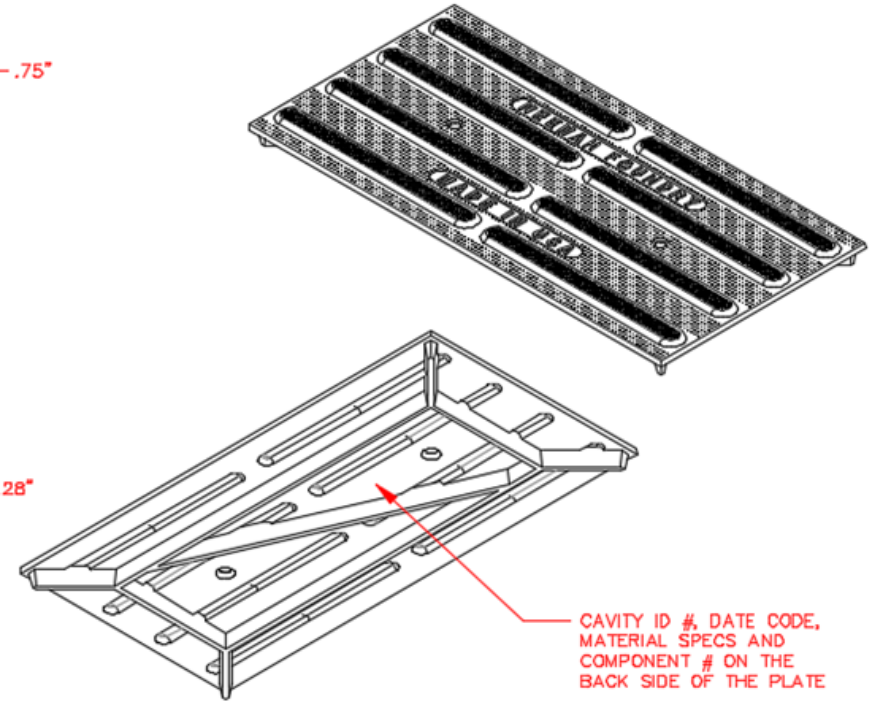

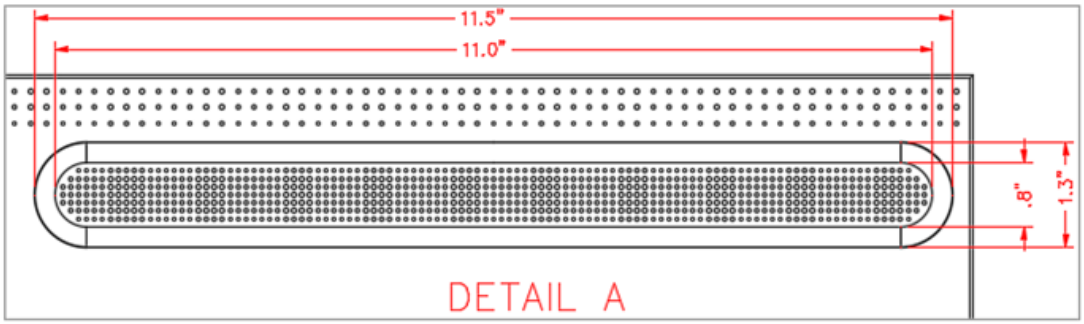

NOTES:
- ALL DIMENSIONS SHOWN ARE IN ENGLISH
- MATERIAL: CAST GRAY IRON ASTM A-48 CLASS 30-MINIMUM
- FINISH: NO PAINT
- WEIGHT: ≈29# WAS 4984T214

CAD DWG. REF: 49847012.DWG- 1

REV	DATE	DESCRIPTION	DR	CH	APP
A	5-19-2023	UPDATED MATERIAL	HSH	JDB	JJF

DR. HSH	SCALE NTS	TITLE: R-4984 1'X2' DIRECTIONAL-BAR PLATE	
CH. JDB			
APP. JJF	NEENAH FOUNDRY	NF-49847012	B
DATE 05-04-2023	NEENAH WISCONSIN 54956 PHONE 800-558-5075		
www.nfco.com	LINCOLN, NEBRASKA 68529 PHONE 800-234-7466		

For additional information please contact us at InfrastructureSolutions@groupnei.com

Visit our website at groupnei.com for infrastructure product information.