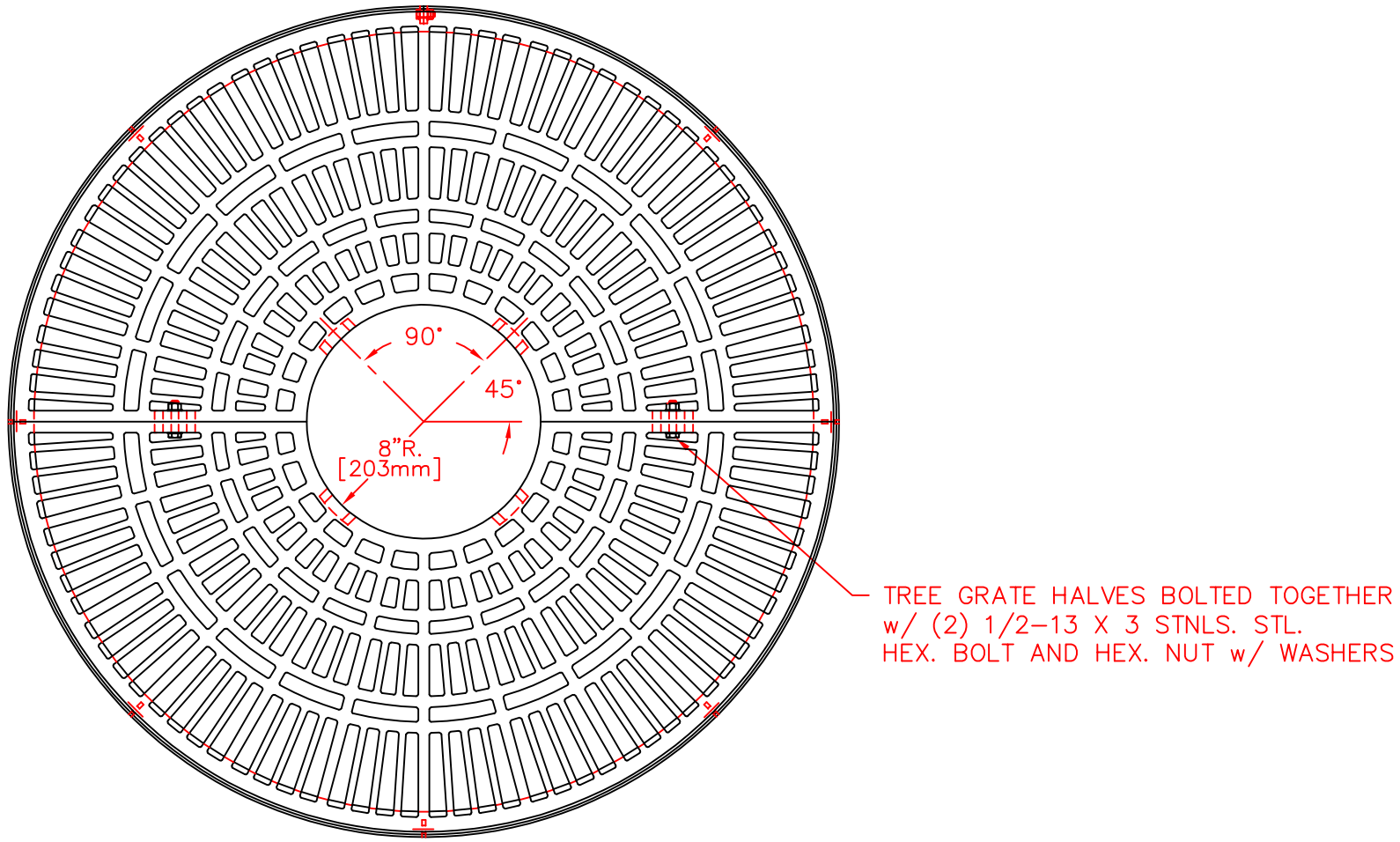

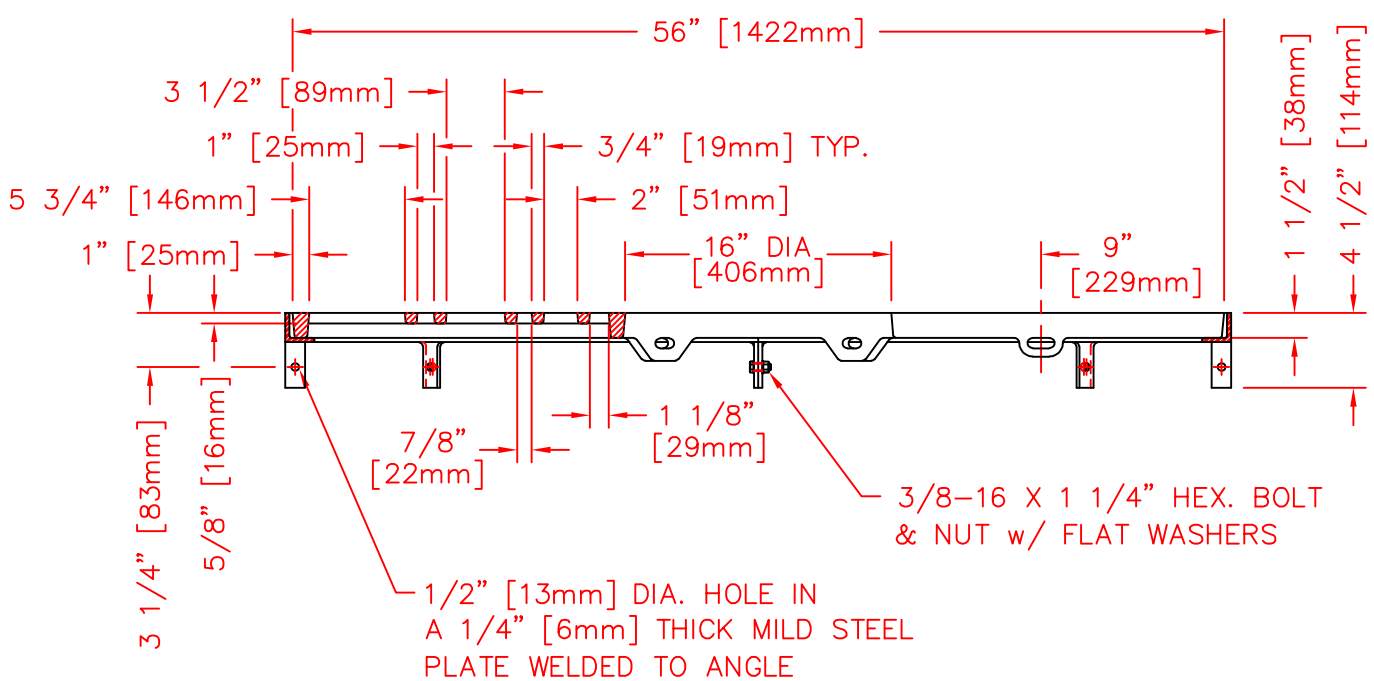

NOTE: ALL DIMENSIONS ARE SHOWN IN ENGLISH AND [METRIC].

COMPONENT NO'S: STEEL FRAME 9992–5638; (2) TREE GRATE 8843–0001

MATERIAL: FRAME – HOT ROLLED MILD STEEL ANGLE (L1 3/4 X 1 3/4 X 1/4)
GRATE – CAST GRAY IRON ASTM A–48, CLASS 35B

FINISH: NOT PAINTED

WEIGHT: TREE GRATE 292#/SET, FRAME APPROX. 41#

DR. M. LAWTON	SCALE 1'=1'–0"	TITLE: R–8843 TREE GRATE AND STEEL FRAME	
CH.			
APP.	DIM CHK.	NEENAH FOUNDRY COMPANY NEENAH WISCONSIN 54956	NF- 8843 101 B
DATE 5–9–94			

CAD DWG. REF: 8843 101.DWG– 1