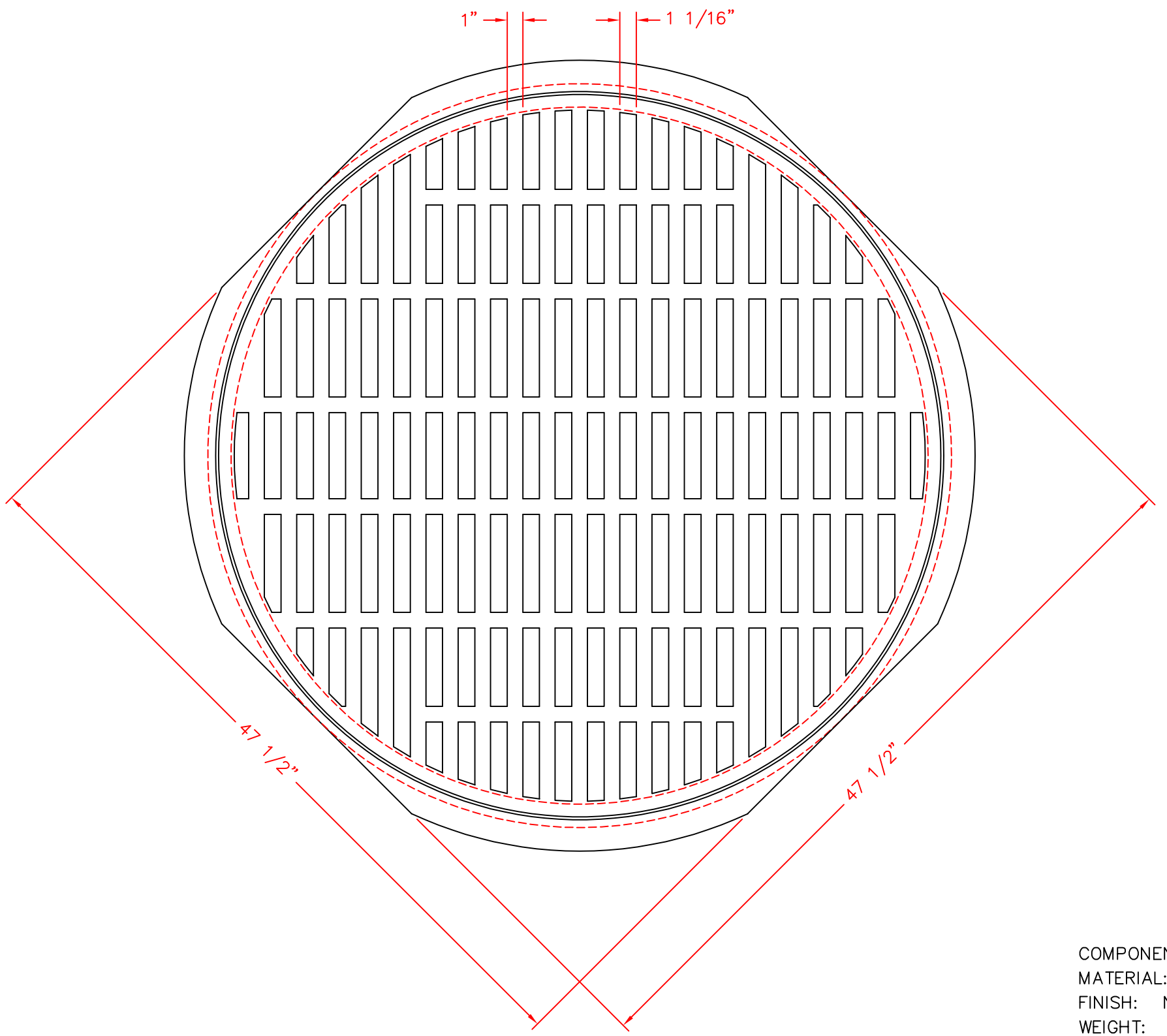

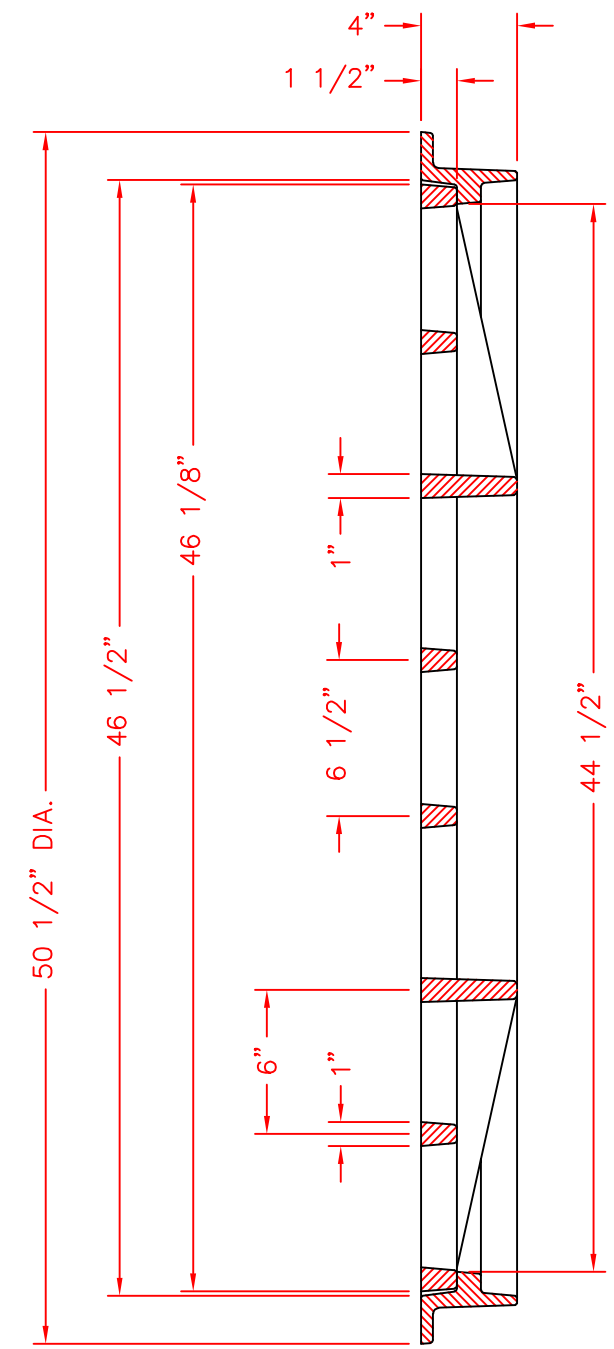

COMPONENT NOS.: FRAME 5900–0017, GRATE 5901–0009
MATERIAL: CAST GRAY IRON ASTM A–48, CLASS 35B
FINISH: NO PAINT
WEIGHT: FRAME 160#, GRATE 430#

1	11–04–2008	CUT THE DEEP RIBS DOWN ON ENDS OF GRATE	ELR
2	DATE	REVISION	INT

DR. MAG	SCALE 1/8"=1"	TITLE: R–5901–K FRAME AND GRATE	
CH.			
APP.	DIM CHK.	NEENAH FOUNDRY COMPANY NEENAH WISCONSIN 54956	NF- 5901 430 B
DATE 06–23–2005			

CAD DWG. REF: 5901430.DWG– 2