3920 500— 1 B8

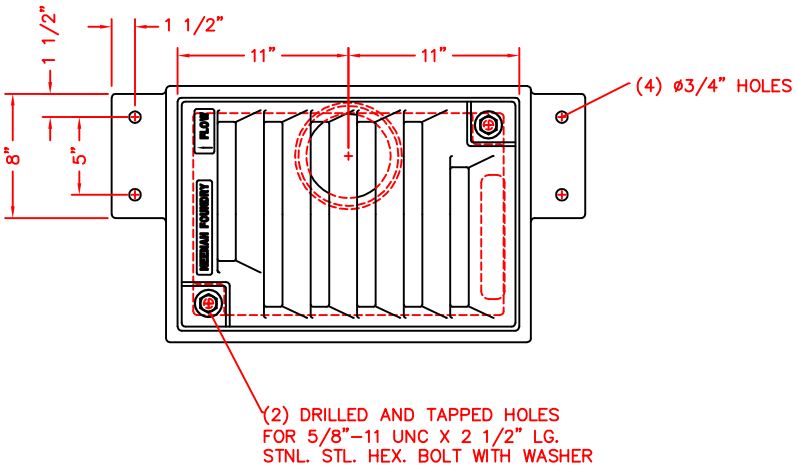

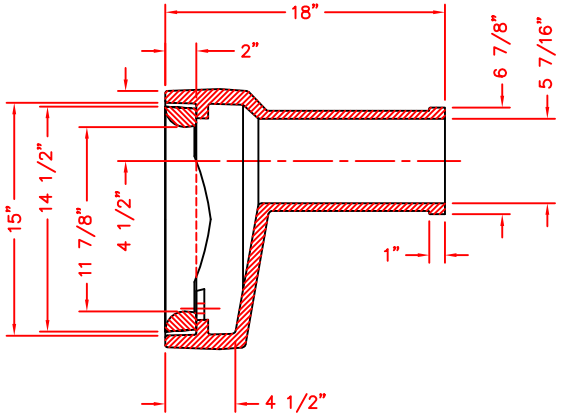

BOLTS NOT SHOWN IN THIS VIEW

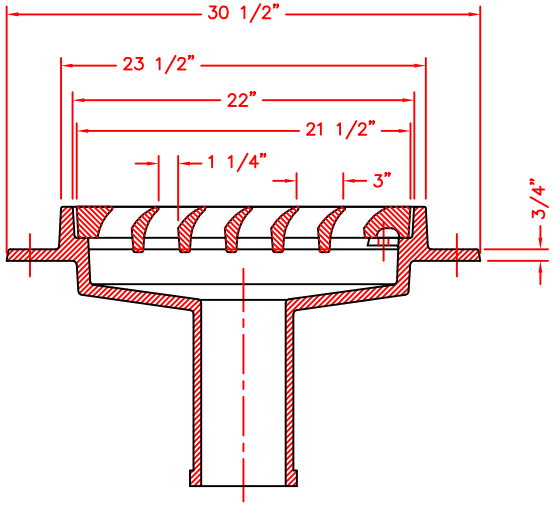

BOLTS NOT SHOWN IN THIS VIEW

COMPONENT NOS.: FRAME: 3920–0001, GRATE: 3920–0007
MATERIAL: CAST GRAY IRON ASTM A–48, CLASS 35B
FINISH: NO PAINT
WEIGHT: FRAME: 183#, GRATE 76#

DR. MAG	SCALE 1/8"=1"	TITLE: R–3920–V FRAME AND TYPE "V" GRATE	
CH.			
APP.	DIM CHK.	NEENAH FOUNDRY COMPANY NEENAH WISCONSIN 54956	NF- 3920 500 B
DATE 01–07–2005			

CAD DWG. REF: 3920500.DWG– 1