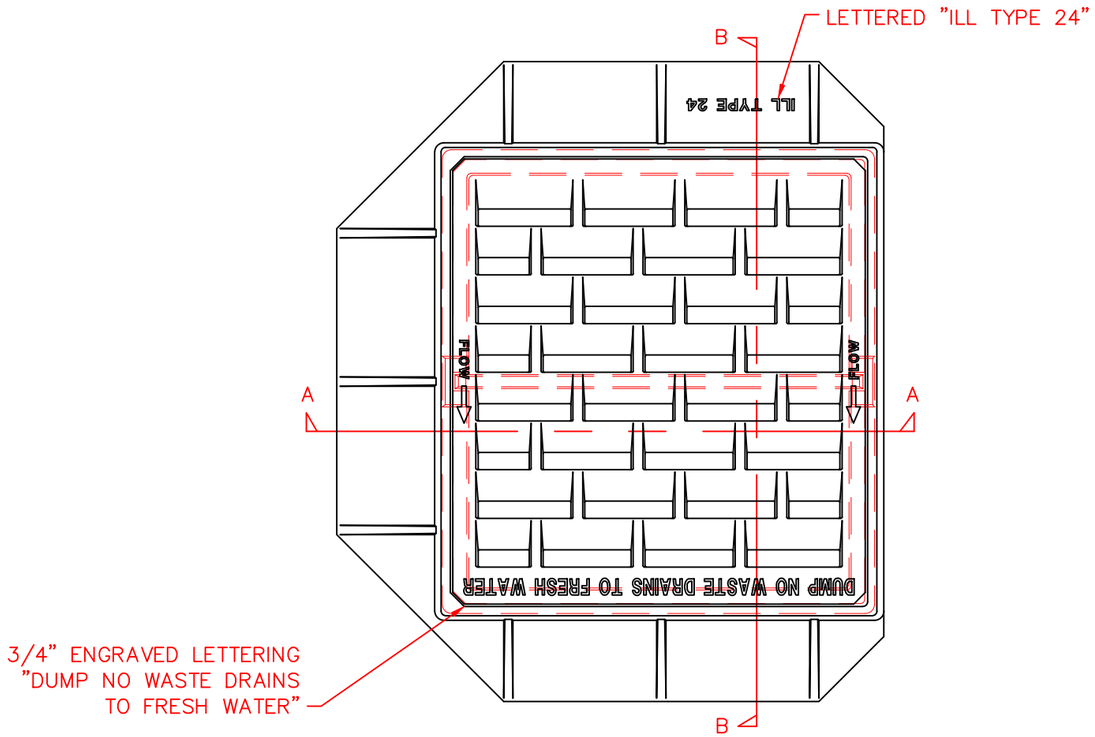

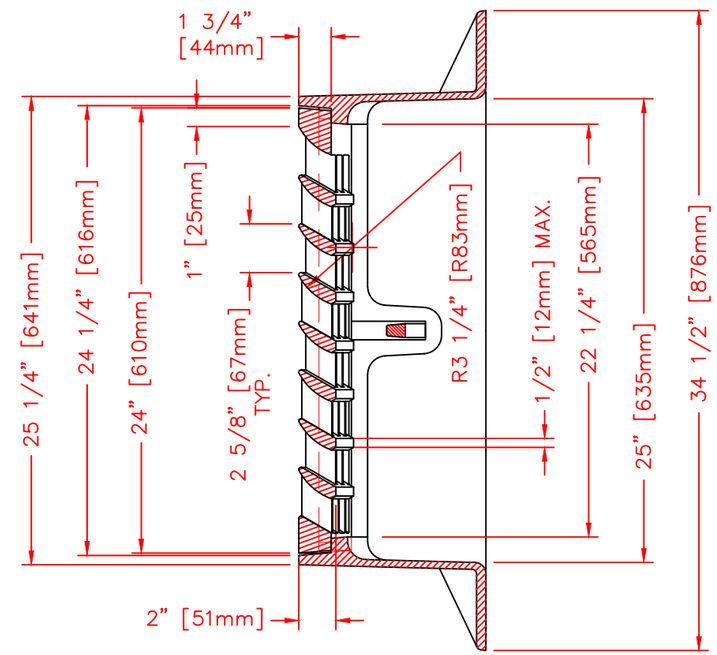

SECTION B–B

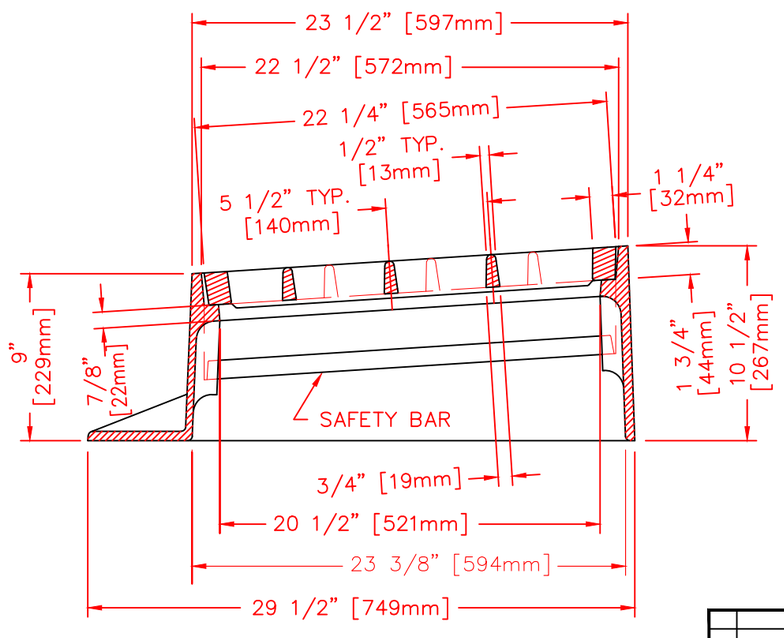

SECTION A–A

NOTE: ALL DIMENSIONS ARE SHOWN IN ENGLISH AND [METRIC].

COMPONENT NO'S: FRAME #3526–2001, GRATE #3526–0003, SAFETY BAR #3526–0004

MATERIAL: FRAME AND GRATE – CAST GRAY IRON ASTM A–48, CLASS 35B.
SAFETY BAR – CAST DUCTILE IRON ASTM A–536, 55 + KSI YIELD

FINISH: NO PAINT

WEIGHT: FRAME – 176#, GRATE – 115#, SAFETY ARM – 4#

1	02–06–2008	ADD ENVIRO LTG. TO GRATE	CSM
2	DATE	REVISION	INT

DR. E. REMME	SCALE 1/8"=1"	TITLE: R–3526 FRAME AND GRATE WITH SAFETY BAR	
CH.			
APP.	DIM CHK.	NEENAH FOUNDRY COMPANY NEENAH WISCONSIN 54956	NF-3526 480 B
DATE 12–28–2004			

CAD DWG. REF: 3526 480–2