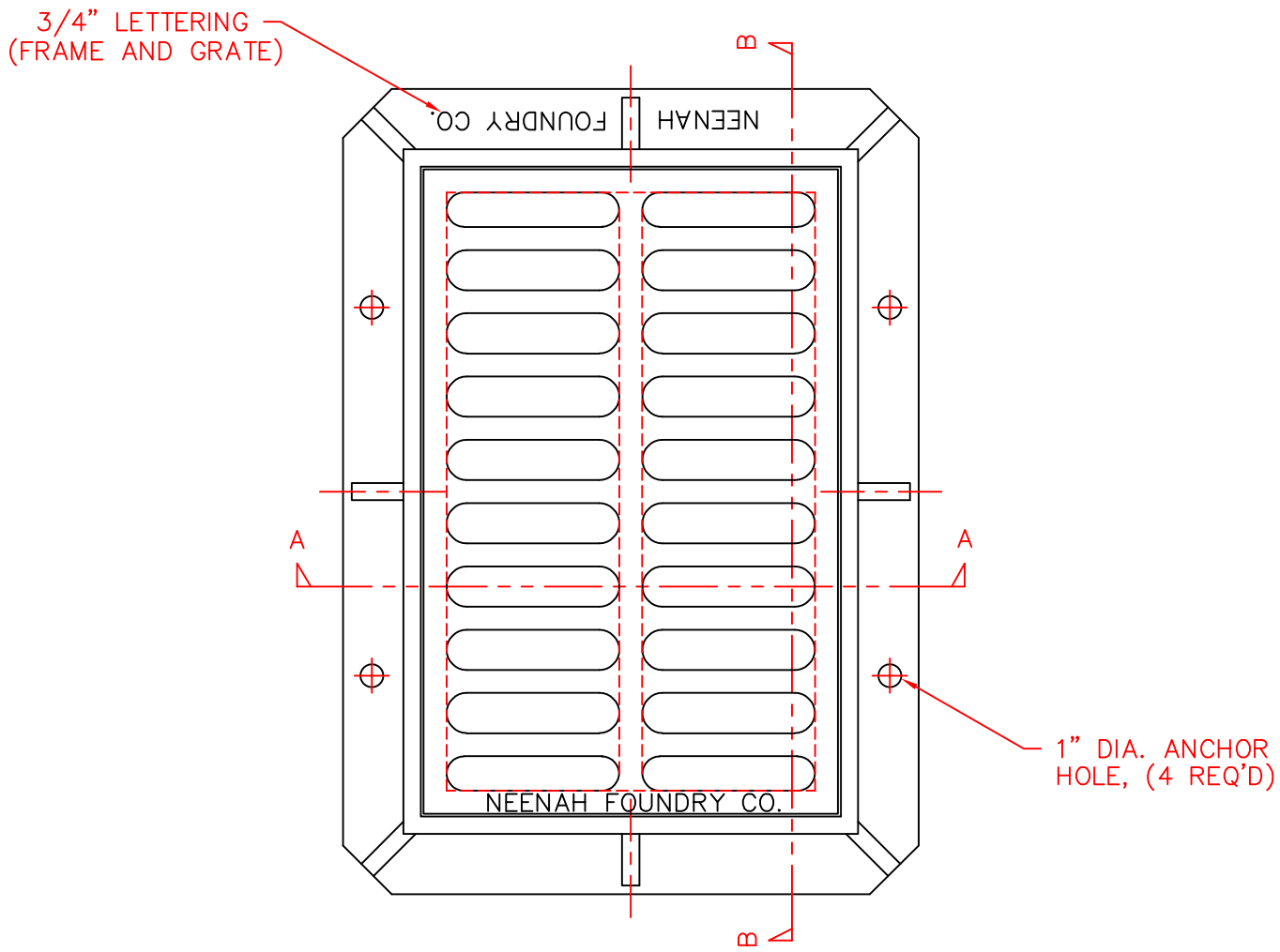

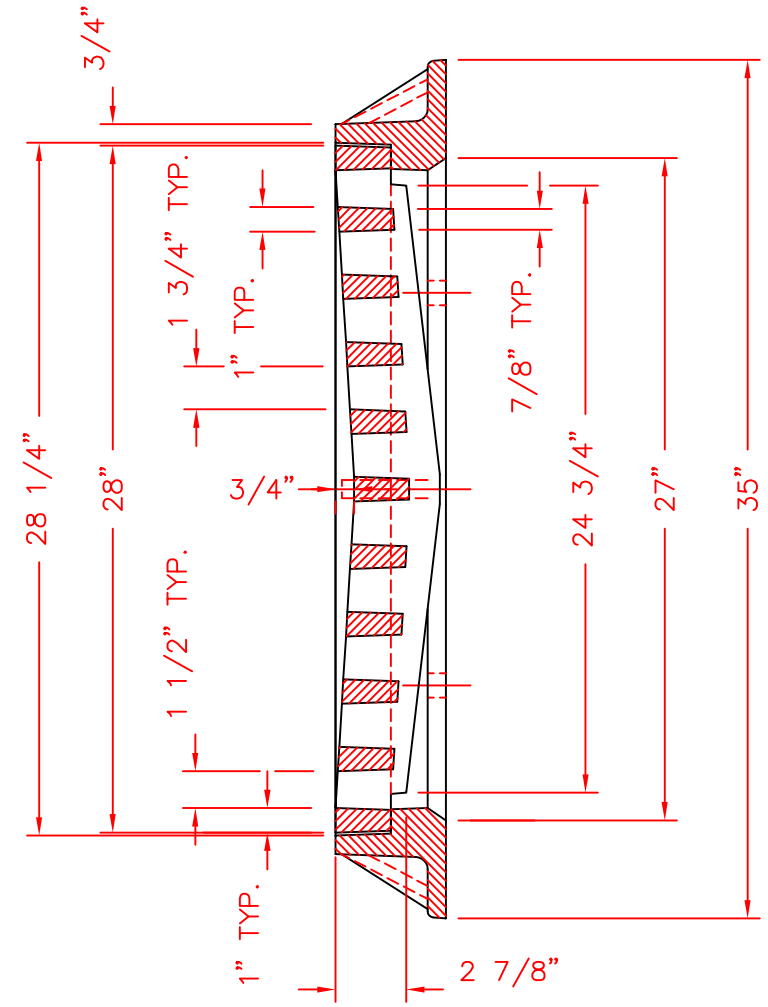

SECTION B–B

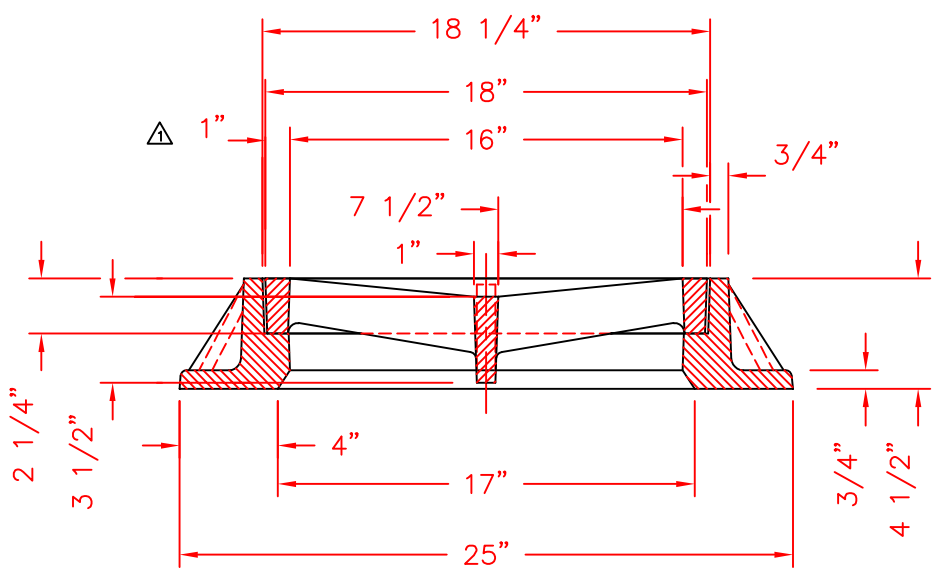

SECTION A–A

NOTE: ALL DIMENSIONS SHOWN ARE IN ENGLISH AND [METRIC]
COMPONENT NOS.: FRAME 3349–0003, LID 3349–0004
MATERIAL: CAST GRAY IRON ASTM A–48, CLASS 35B
FINISH: NO PAINT
WEIGHT: FRAME 207#, LID 139#

1	11–15–2000	1" WAS 13/16"	LMA
2	DATE	REVISION	INT

DR.	E. REMME	SCALE 1/8"=1"	TITLE: R–3349–A CATCH BASIN FRAME AND GRATE
CH.			
APP.		DIM CHK. O.K.	NEENAH FOUNDRY COMPANY NEENAH WISCONSIN 54956 — NF-3349 600 B
DATE	12–18–87		

CAD DWG. REF: 3349600–2