DRAWING CONTROL: CONTROLLED DRAWINGS ON NFCO SERVER. ALL OTHER COPIES, ELECTRONIC OR PRINTED ARE FOR REFERENCE ONLY

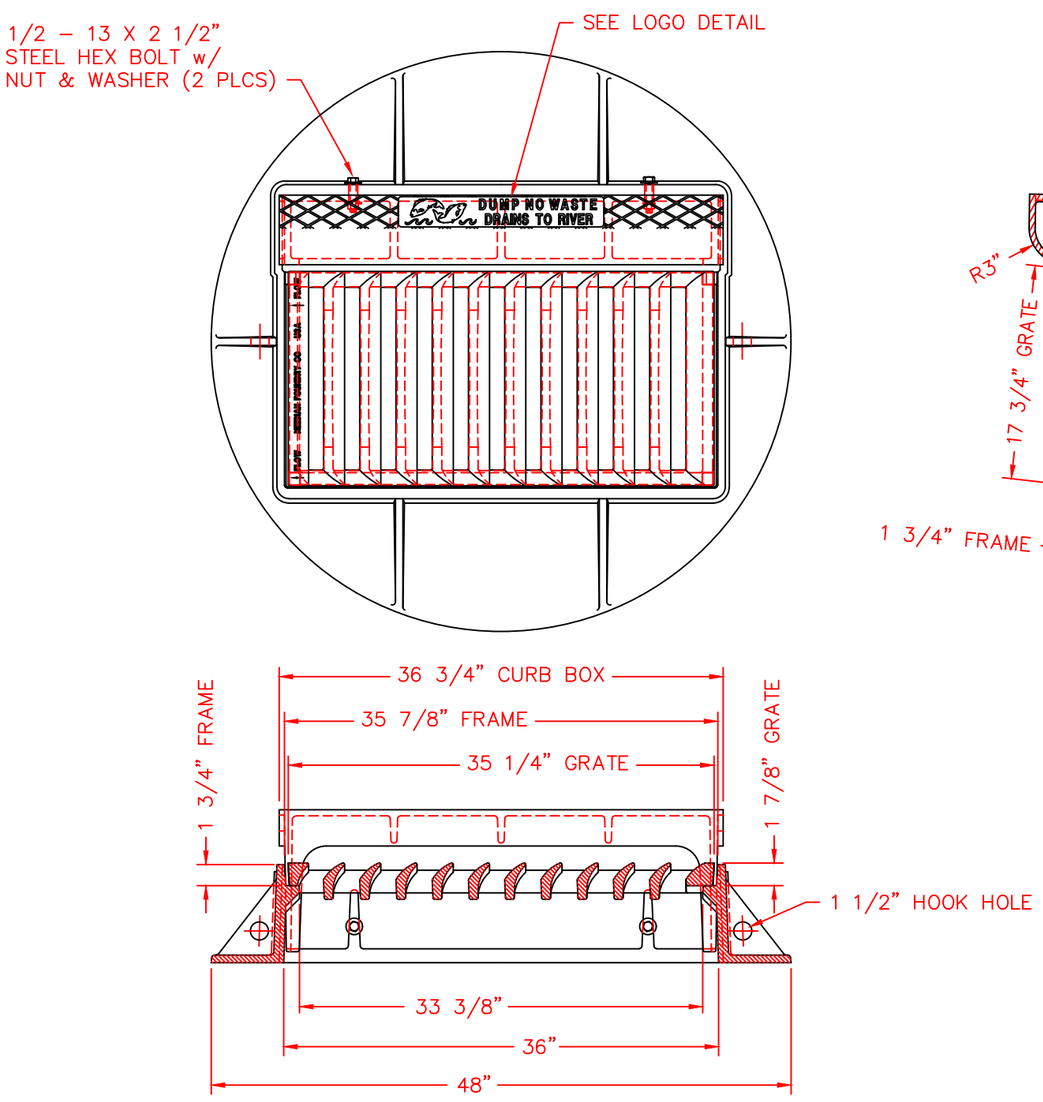

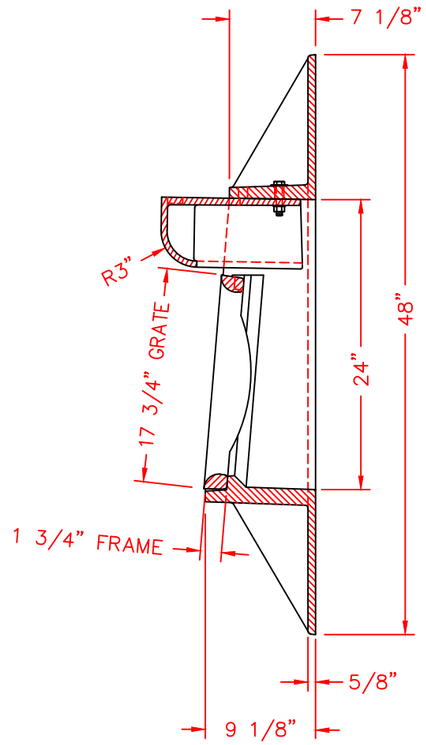

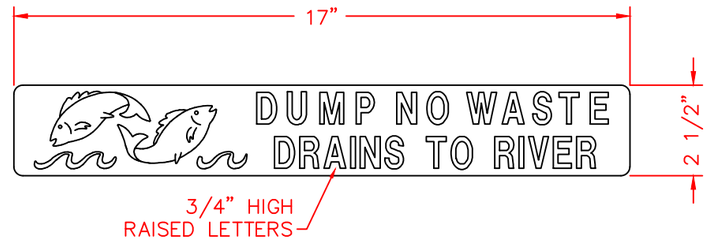

LOGO DETAIL
SCALE 1:4

NOTES:
- COMPONENT NOS.: FRAME 3246–0006, GRATE 3067–3018, CURB BOX 3290–0044
- MATERIAL: CAST GRAY IRON ASTM A–48, CLASS 35B
- FINISH: NO PAINT
- WEIGHT: 3246–0006~429#, 3067–3018~137#, 3290–0044~112#

REV	DATE	DESCRIPTION	DR	CH	APP
A	XX–XX–XXXX	XXX	XXX	XXX	XXX

DR.	E. NIVER
CH.	RKB
APP.	SPT
DATE	03–01–2019
	www.nfco.com

SCALE 1"=1'–0"

TITLE: R–3246–F
FRAME, GRATE AND CURB BOX

NEENAH FOUNDRY
NEENAH WISCONSIN 54956
PHONE 800–558–5075
LINCOLN, NEBRASKA 68529
PHONE 800–234–7466

NF-3246990 B

CAD DWG. REF: 3246990.DWG– 0