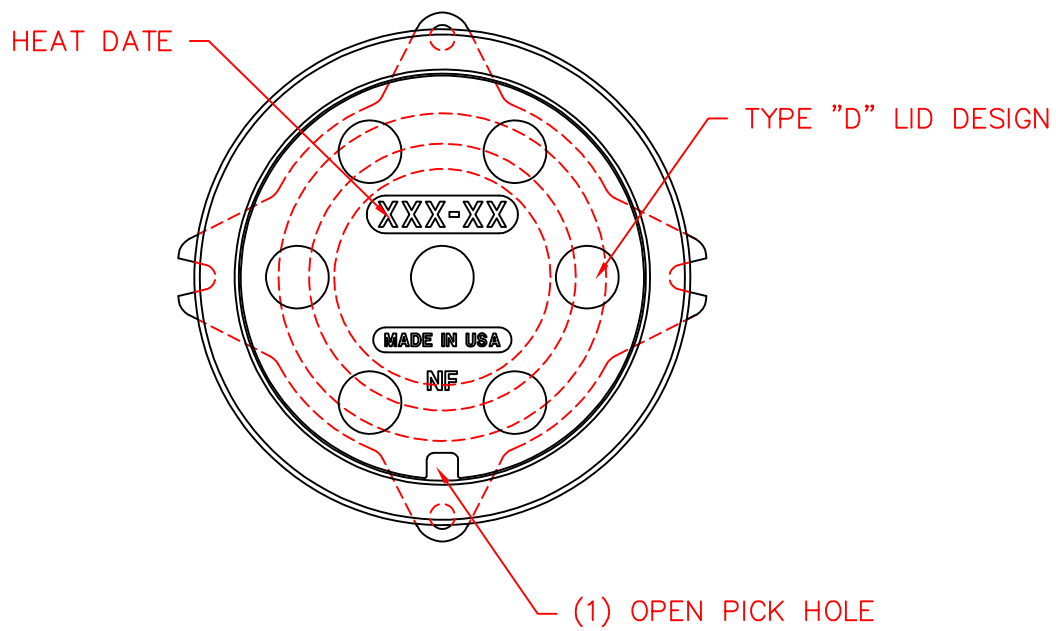

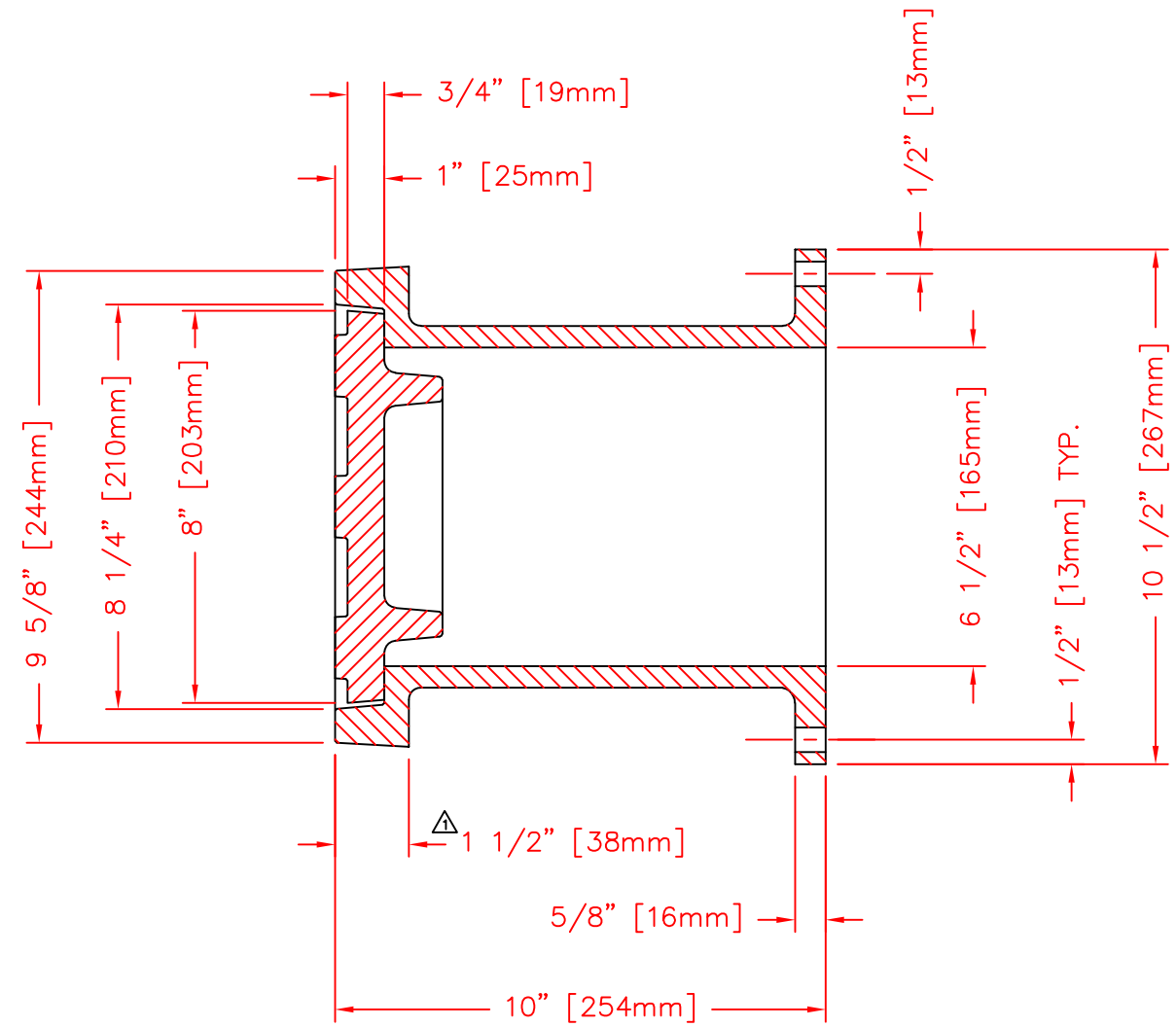

NOTE: ALL DIMENSIONS SHOWN ARE IN ENGLISH AND [METRIC]
COMPONENT NOS.: FRAME 1971–0003, LID 1971–0002
MATERIAL: CAST GRAY IRON ASTM A–48, CLASS 35B
FINISH: NO PAINT
WEIGHT: FRAME 39#, LID 13#

1	12-07-2017	DIMENSION WAS 2"	ELN	JDB	SPT
	DATE	REVISION	DR	CH	APP

DR. KMH	SCALE 1 : 4	TITLE: R–1971 FRAME AND LID	
CH.			
APP.	DIM CHK.	NEENAH FOUNDRY COMPANY NEENAH WISCONSIN 54956	NF-1971 410 B
DATE 02–16–2000			

CAD DWG. REF: 1971410.DWG– 2