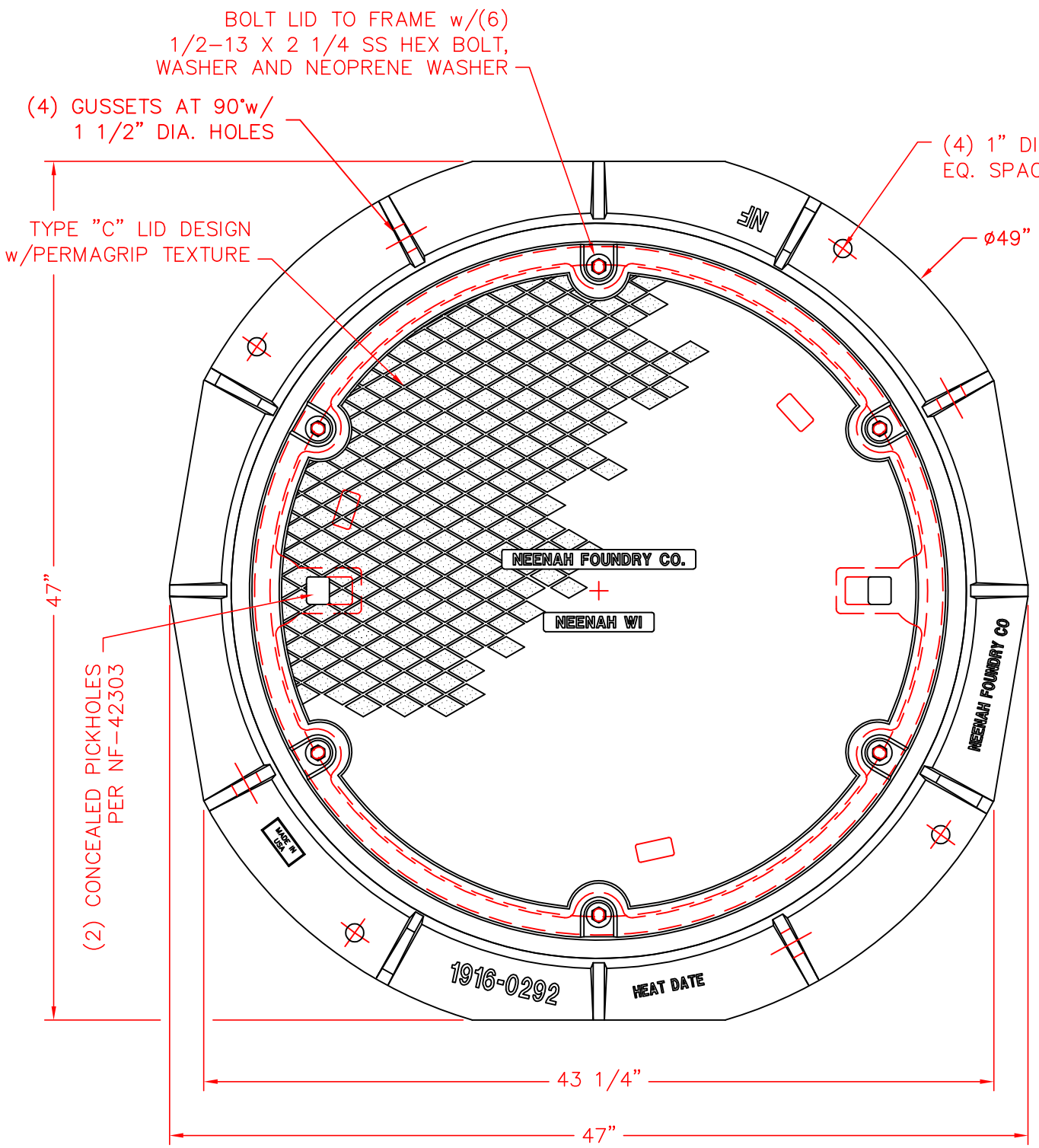

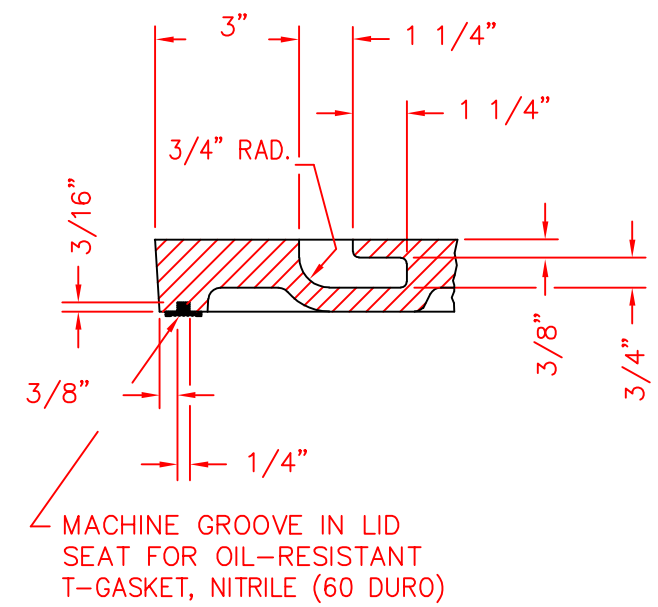

T-SEAL/CONCEALED PICK DETAIL

SCALE 1:4

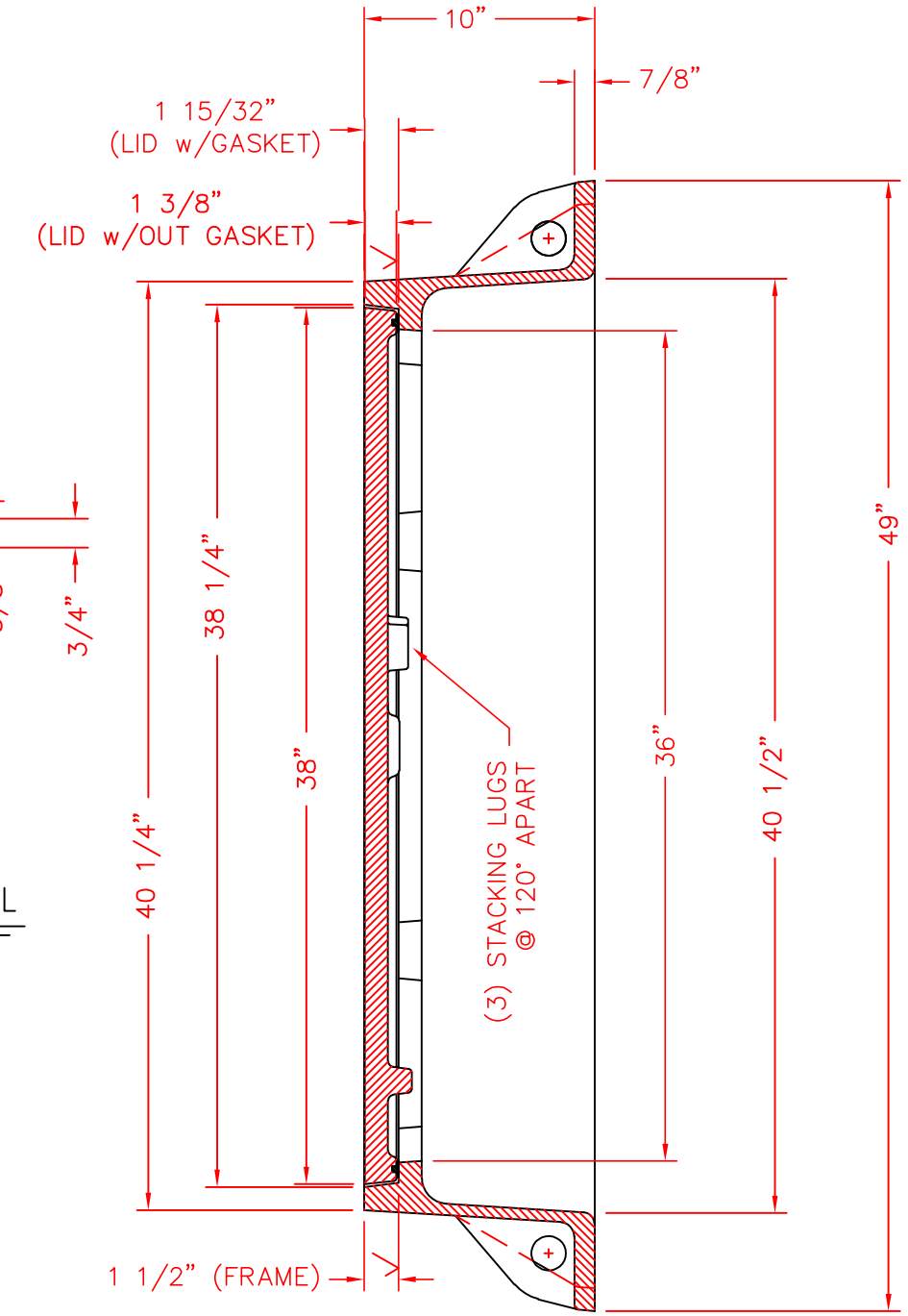

NOTE: ALL DIMENSIONS SHOWN ARE IN ENGLISH
COMPOENENT NOS.: FRAME 1916-0292, LID 1916-0376
MATERIAL: CAST GRAY IRON ASTM A-48, CLASS 35B
FINISH: NO PAINT
WEIGHT: FRAME 470#, LID 294#

	DATE	REVISION	INT
2	09-27-2004	REVISED FRAME GUSSETS	KMH
1	09-17-1998	UPDATED FRAME PER EQUIPMENT REVISION, LID 1 3/8" WAS 1 1/2"	KMH

DR. E. REMME
CH.
APP.
DATE 04-23-1997

SCALE 1/8"=1"
DIM CHK.

TITLE: R-1916-K FRAME AND BOLTED LID w/ "T" SEAL GASKET

NEENAH FOUNDRY COMPANY
NEENAH WISCONSIN 54956

NF-1916 630 B

CAD DWG. REF: 1916630.DWG- 3