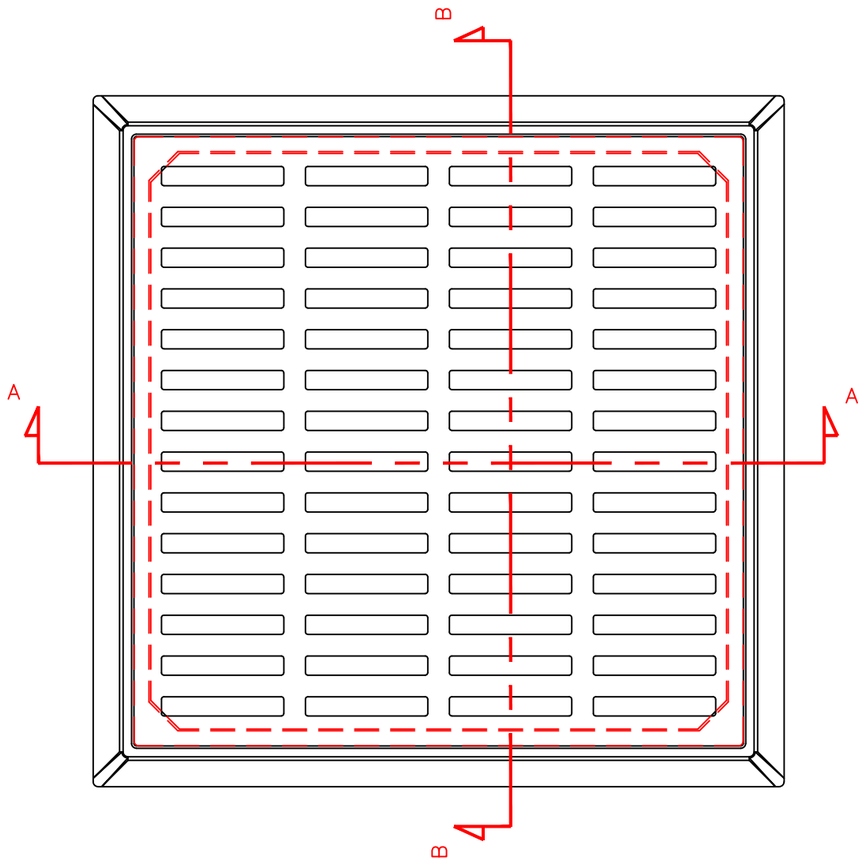

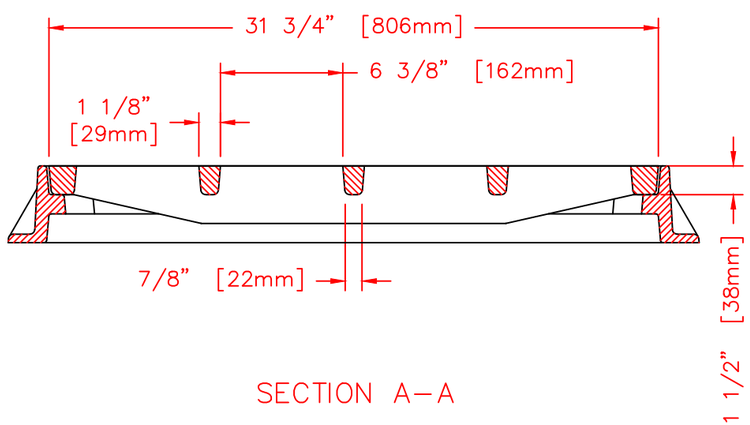

SECTION A–A

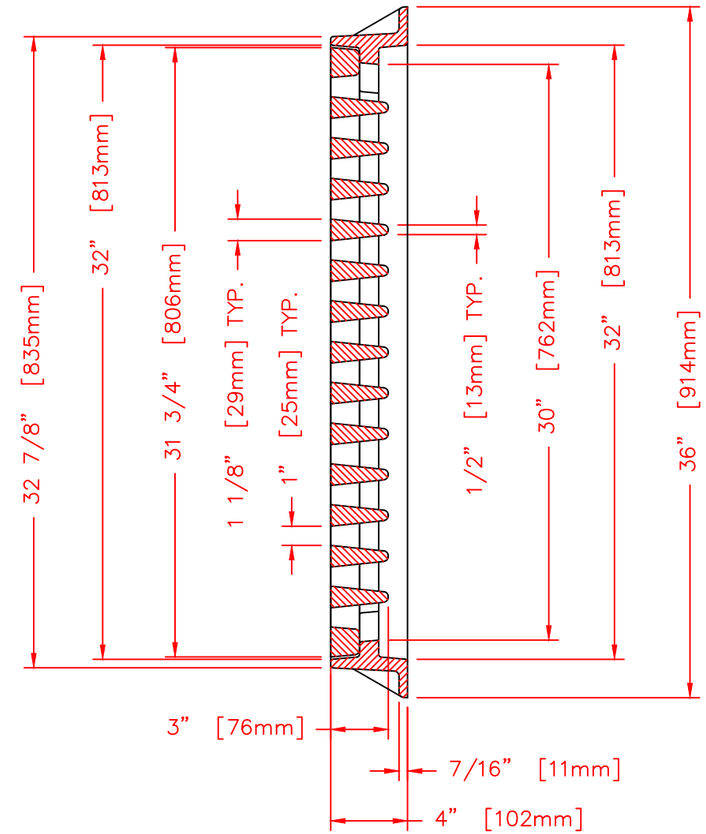

SECTION B–B

NOTE: ALL DIMENSIONS SHOWN ARE IN ENGLISH AND [METRIC].

COMPONENT NO'S: FRAME 1878–2028, GRATE 1878–0068

MATERIAL: CAST GRAY IRON ASTM A–48, CLASS 35B

FINISH: NO PAINT

WEIGHT: FRAME 128#, GRATE 341#

DR. KMH	SCALE 1 : 8	TITLE: R–1878–A9G FRAME AND GRATE	
CH.			
APP.	DIM CHK.	NEENAH FOUNDRY COMPANY NEENAH WISCONSIN 54956	NF-1878 432 B
DATE 12–04–98			

CAD DWG. REF: 1878432.DWG– 1