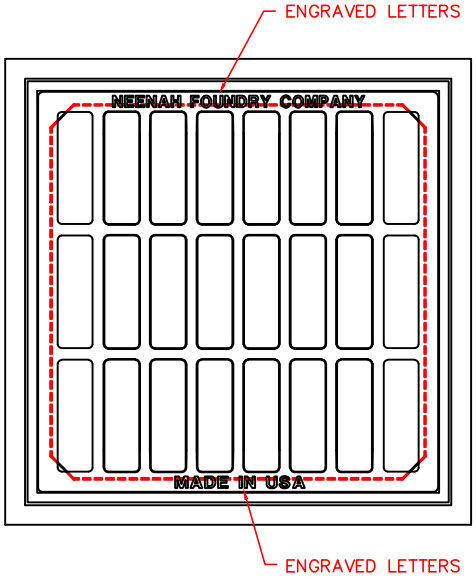

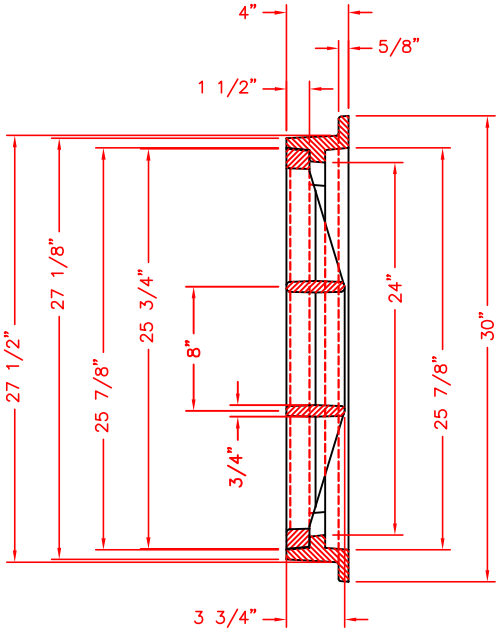

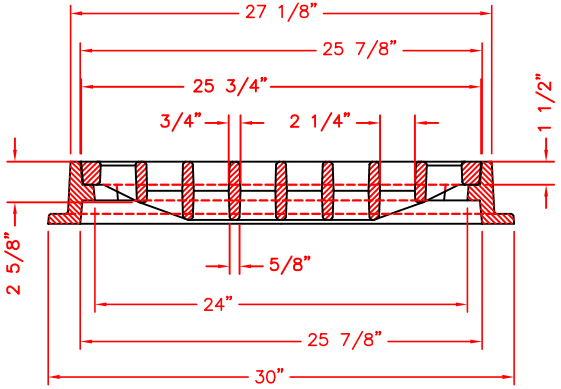

COMPONENT NOS.: FRAME 1878–0017; GRATE 1878–3019

MATERIAL: CAST GRAY IRON ASTM A–48, CLASS 35B

LOAD RATING: CAPABLE OF H–25 / HS–25 LOADING

FINISH: NO PAINT

WEIGHT: FRAME 134#; GRATE 160#

3	10–11–2016	ADDED LOAD RATING NOTE	JJF
2	05–09–2007	UPDATED THE GRATE	ELR
1	DATE	REVISION	INT

DR. CSK	SCALE 1/8"=1"	TITLE: R–1878–A6G FRAME AND GRATE	
CH.			
APP.	DIM CHK.	NEENAH FOUNDRY COMPANY NEENAH WISCONSIN 54956	NF-1878 315 B
DATE 07–09–2003			

CAD DWG. REF: 1878315.DWG– 3