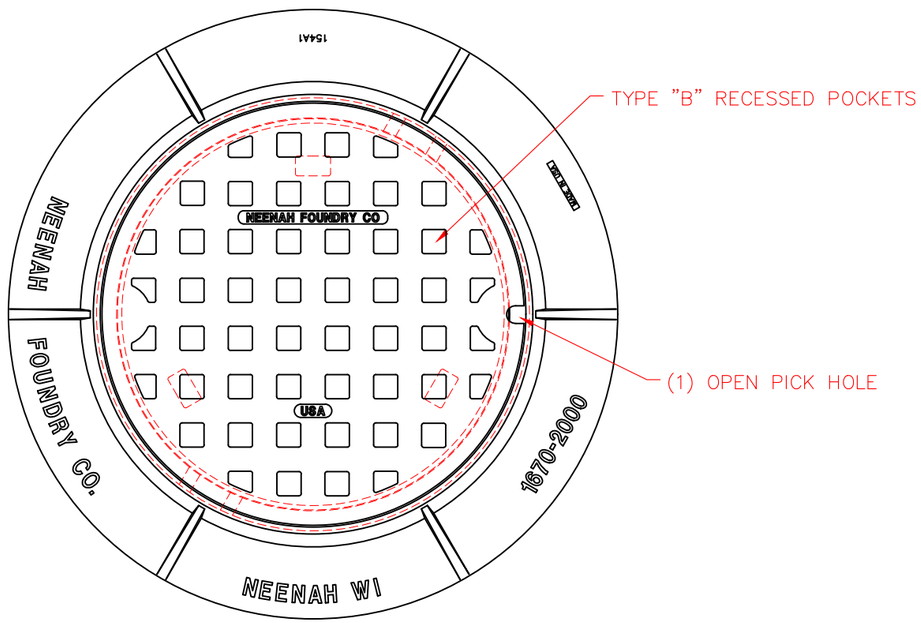

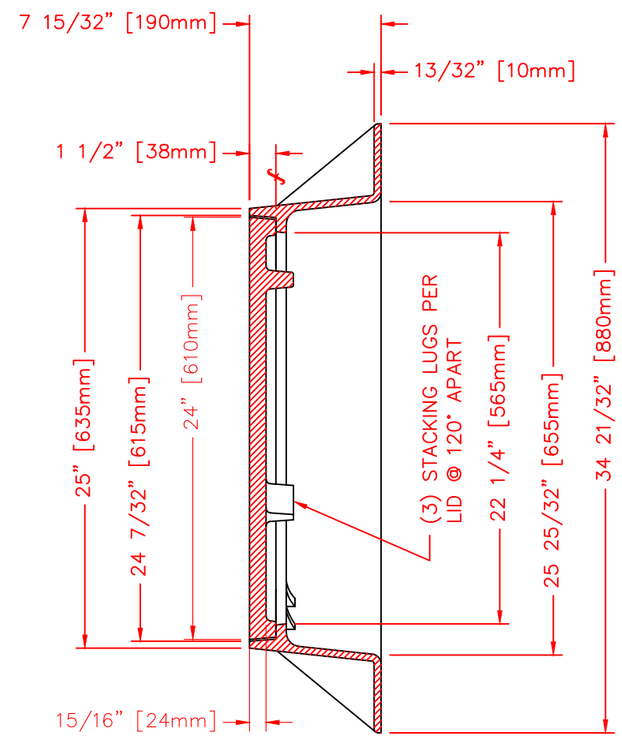

NOTE: ALL DIMENSIONS ARE SHOWN IN ENGLISH AND [METRIC].
SUITABLE FOR H–20 LOADING

COMPONENT NO'S.: FRAME 1670–2000; LID 1670–5000

MATERIAL: CAST GRAY IRON ASTM A–48 CLASS 35B

FINISH: NO PAINT

WEIGHT: FRAME 118#; LID 119#

DR. E. NIVER	SCALE 1/8"=1"	TITLE: R–1726–A FRAME AND PLATEN LID	
CH. RKB			
APP. SPT	NEENAH FOUNDRY NEENAH WISCONSIN 54956 PHONE 800–558–5075 LINCOLN, NEBRASKA 68529 PHONE 800–234–7466	NF-1726 280	B
DATE 04–15–2016			
www.nfco.com			

CAD DWG. REF: 1726 280.DWG– 1