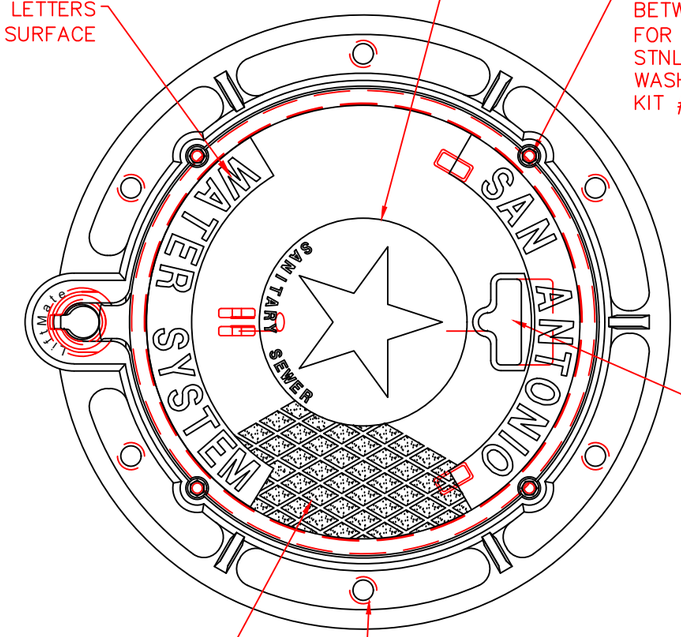

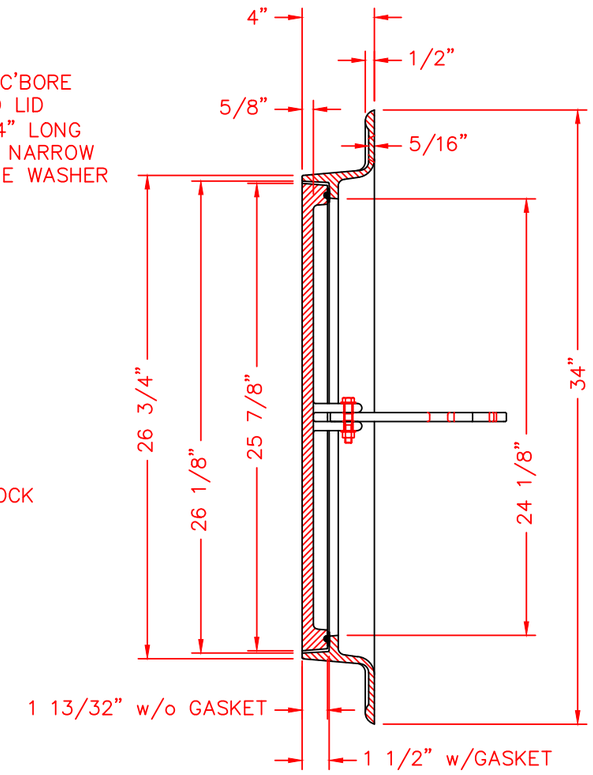

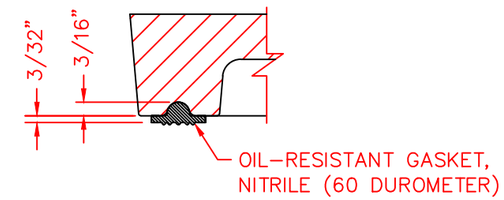

"T-SEAL" GASKET DETAIL
SCALE 1:2

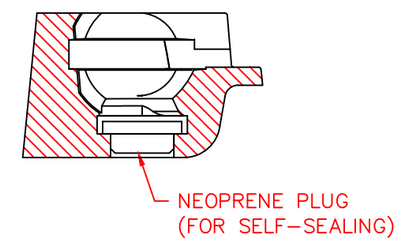

FRAME SHOWING HINGE PLUG
SCALE 1:4

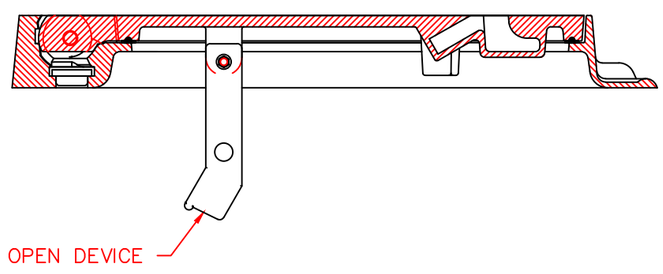

PATENT# 7,744,304

COMPONENT NOS.: FRAME 1650-2100, LID 1650-5357
MATERIAL: CAST GRAY IRON ASTM A-48, CLASS 35B
FINISH: NO PAINT
WEIGHT: FRAME 90#, LID 109#

WAS NF-1650LT43

DR. E. NIVER	SCALE 1/8"=1"	TITLE: R-1650-LM FRAME & LID w/ LOGO, GASKET & BOLTED	
CH. JDB			
APP. SPT	NEENAH FOUNDRY		
DATE 02-14-2017	NEENAH WISCONSIN 54956 PHONE 800-558-5075	NF-1650 820	B
www.nfco.com	LINCOLN, NEBRASKA 68529 PHONE 800-234-7466		

CAD DWG. REF: 1650 820.DWG- 1